JAGUAR

Technical Guide

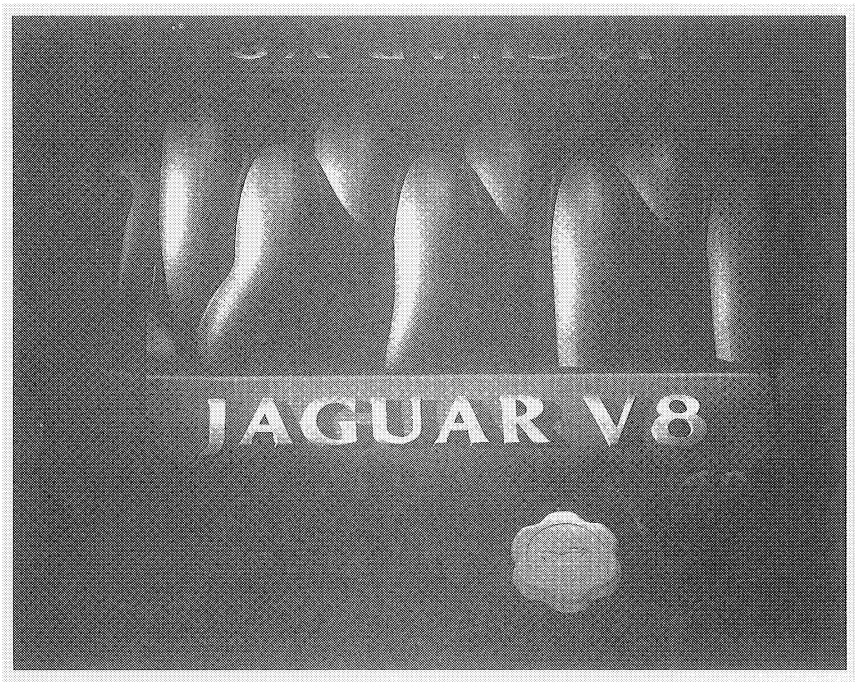

XJ and XK Series 1999 Model Year Update

BY APPOINTMENT TO
HER MAJESTY QUEEN ELIZABETH II
MANUFACTURERS OF DAIMLER AND JAGUAR CARS
JAGUAR CARS LIMITED COVENTRY

BY APPOINTMENT TO
HER MAJESTY QUEEN ELIZABETH
THE QUEEN MOTHER
MANUFACTURERS OF DAIMLER AND JAGUAR CARS
JAGUAR CARS LIMITED COVENTRY

BY APPOINTMENT TO
HIS ROYAL HIGHNESS THE PRINCE OF WALES
MANUFACTURERS OF DAIMLER AND JAGUAR CARS
JAGUAR CARS LIMITED COVENTRY

JAGUAR

Technical Guide

XJ and XK Series 1999 Model Year Update

Published by Service Communications, Jaguar Cars Limited
Publication Part No JJM 18 15 18/90, July 1998

This Technical Guide introduces 1999 MY changes to XJ Series sedan and XK Series sports range of vehicles. It is intended to give Jaguar Dealer workshop personnel an overview of the changes which have taken place and is for information purposes only. The contents of this Technical Guide must not be used as a reference source for servicing procedures; all servicing must be carried out in accordance with the appropriate Service Manual on the JTIS disc.

This Technical Guide will not be updated. While every effort is made to ensure accuracy, changes may occur between going to press and the equipment being introduced to the market. Once the equipment is in service, details of changes can be obtained from Service Bulletins and revisions to the JTIS disc.

All rights reserved. No part of this publication may be reproduced, stored in a retrieval system or transmitted, in any form, electronic, mechanical, photocopying, recording or other means without prior written permission from the Service Division of Jaguar Cars Limited.

Subject	Page
Glossary	
Abbreviations	2
Introduction	3
Body	4
Engine	
AJ27 Engine Introduction	5
Specification	5
Basic Engine	6
Variable Valve Timing	10
Throttle Body	16
Engine Management	
Introduction	19
EMS Sensors	20
Ignition System	25
Engine Control Module	26
Fuel System	
Air Assisted Fuel Injection	27
Evaporative Emissions Control	30
Transmission	33
Chassis	
Steering System	34
Brake System	34
Road Wheels	34
Electrical/Electronic	
Rear Speakers	35

The following abbreviations are used in this document:

Abbreviation	Description
AAC	air assist control (valve)
AAI	air assist injection
AAP	accelerator pedal position (sensor)
A/C	air conditioning
AFR	air fuel ratio
BTDC	before top dead centre
°C	degrees Celsius
CAN	controller area network
CKP	crankshaft position (sensor)
CMP	camshaft position (sensor)
DTC	diagnostic trouble code
ECM	engine control module
ECT	engine coolant temperature
EGR	exhaust gas re-circulation
EMS	engine management system
EOT	engine oil temperature (sensor)
EWB	extended wheel base
HC	hydrocarbon
HO2	heated oxygen (sensor)
Hz	Hertz (cycles per second)
IAT	intake air temperature (sensor)
in	inch
JTIS	Jaguar Technical Information System
Km	kilometres
LH	left-hand
m	miles
MAF	mass air flow (sensor)
mm	millimetres
MY	model year
N/A	normally aspirated
NOx	nitrous oxide
OBD II	on-board diagnostic stage 2
ORVR	on-board refuelling vapour recovery
PAS	power assisted steering
PASCM	power assisted steering control module
PWM	pulse width modulation
RH	right-hand
RPM	revolutions per minute
SC	supercharged
TCM	transmission control module
TP	throttle position (sensor)
VVT	variable valve timing

General

The major change for the 1999 model year is the introduction of the AJ27 N/A V8 engine for sports cars and sedans. This engine is a development of the AJ26 V8 engine and retains the basic mechanical specification and configuration. The main enhancements are in the engine control systems and associated components and include continuously variable inlet valve timing, air assisted fuel injection, and a full authority electronic throttle. The whole of the engine management system is revised with a new engine control module, EMS sensors and modified software. To meet increasingly stringent emissions targets, particularly in NAS markets, the focus of these changes is to reduce exhaust pollutants both during cold starts and throughout the engine speed and load range. Engine power and vehicle performance are un/affected.

On-board refueling vapour recovery (ORVR) is now extended to XK8 vehicles, bringing them into line with the sedan in respect of evaporative emissions control.

Changes to the chassis systems include the fitment of larger front brakes to XJR and a new power assisted steering assembly is introduced to all XJ Series and XK8 models.

B/C POST BRACE

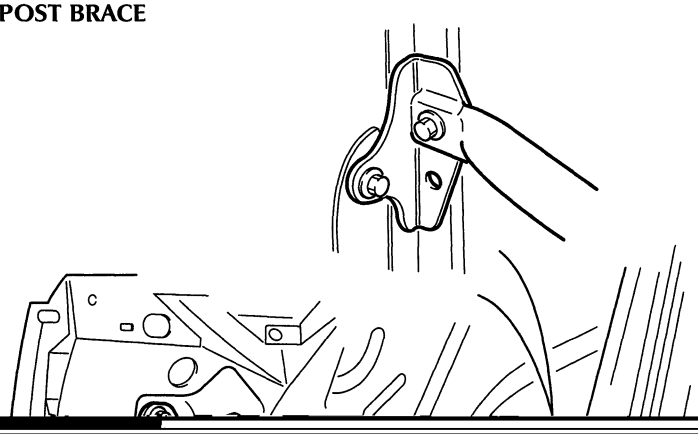

There are no changes to the bodywork on XJ Series and XK8 coupe models with only minor changes to XK8 convertible. Minor exterior and internal trim revisions are listed below.

B/C Post Braces

On convertible XK8 vehicles, to improve torsional rigidity, B/C post braces have been introduced between the B/C post and the rear pillars behind the seats. The rear speaker units for standard ICE are mounted off this brace.

Exterior Paint Finish

- The range of paint finishes is changed with

AJ27 Engine Introduction

The AJ27 engine is a development of the AJ26 unit fitted to the XJ8 sedan and XK8 sports and is in N/A form only: some of the mechanical changes are, however, applied to the SC engine to rationalize production. General on-going improvements and the introduction of new features has required a number of detail changes:

- continuously variable inlet valve timing (VVT): the VVT mechanism is different to the previous system and associated changes have been made to the camshaft, cam position sensors, pistons and lubrication system. VVT is not fitted to the SC engines
- air assisted fuel injection: this feature has required changes to the fuel charging system and intake manifold
- full authority electronic throttle control with cable operation and (limp home) mode: the main effects of this feature are enhanced EMS control and the deletion of cruise control hardware
- engine sensors: some engine sensors have been replaced by improved or more cost effective types and additional sensors are fitted
- modified engine management system: physical changes are limited to the module and engine harness
- a number of changes are made to engine components to reduce weight, improve efficiency and help production cost effectiveness.

Specification

The engine specification for all models is as given in previous Technical Guides with the exception of changes to spark plugs and oil specifications.

Spark Plugs

	4.0 Litre N/A	4.0 Litre SC
Unleaded fuel	PFR5G-13E	PFR6G-13E

Oil Specification

The recommended SAE viscosity for different ranges of ambient temperature are shown in the table. For maximum economy and in most climate conditions, SAE 5W/30 is to be preferred but SAE 10W/30 or 15W/40 are acceptable in moderate to hot climates.

SAE/TEMPERATURE TABLE

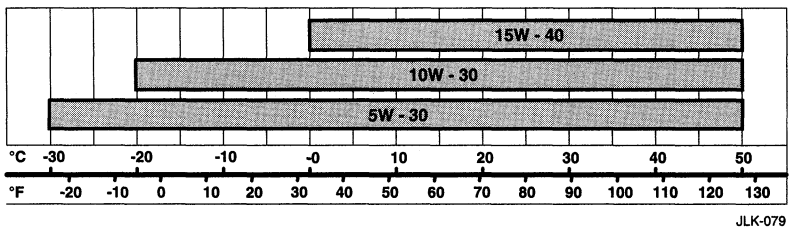

Basic Engine

Bottom End

Cylinder Block

There are no functional changes to the cylinder block on this engine. Additional PAS and A/C compressor mounting bosses are provided for future use and to commonise production.

Connecting Rod

The connecting rods have a new material composition but are otherwise unchanged.

4.0L N/A PISTON

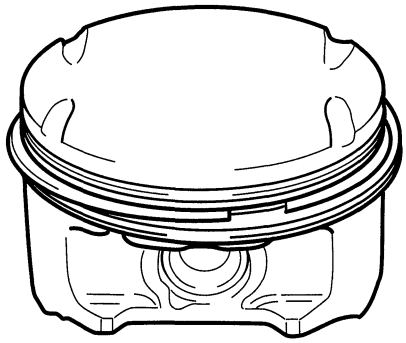

D.303.1170

Pistons

Modified pistons are fitted to the AJ27 4.0L N/A engine to allow for the increased timing advance of the new VVT system. The piston crown has cut outs to provide extra clearance for the inlet valves which, at full advance, open approximately 8° earlier BTDC compared to the AJ26 engine. Four cut outs are used to enable a common piston to be fitted in both engine banks.

On the SC engines, small dimentional changes have been made to the piston land regions.

TRANSMISSION DRIVE PLATE

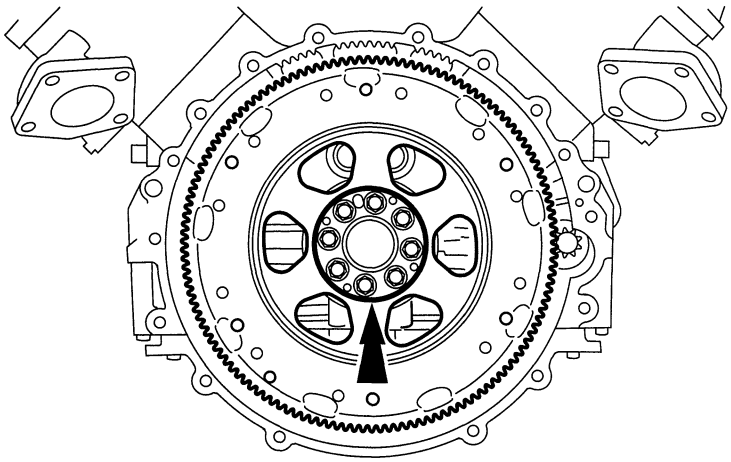

J.303.1247

Transmission Drive Plate

To achieve commonality across the V8 engine range, longer bolts are used to fix the drive plate to the crankshaft. To accommodate the extra length, a spacer (arrowed) is welded to the transmission side of the drive plate. Locating the drive plate to the crankshaft is improved by the use of a stepped dowel which replaces the previous parallel dowel.

Cylinder Head

Inlet Ports

The introduction of the air assisted fuel injection system (AAI) increases the convergence of the injector twin spray pattern. To reduce wall wetting, the inlet port divider walls are re-profiled.

Camshaft Position Sensor

A camshaft position (CMP) sensor location hole is now provided in the RH cylinder head on all engines in addition to the existing location in the LH bank. New type CMP sensors are fitted to both banks of the 4.0L N/A engine.
On the SC engine, the CMP sensor in the LH bank is unchanged and a blanking plug is fitted to the new sensor hole in the RH bank.

Camshaft Position Sensor Rings

A four tooth sensor ring is fitted to the inlet camshaft of both cylinder banks on the 4.0L N/A engine. The sensor ring is a keyed pressed fit into the rear end of the camshaft.
The SC engine retains the single tooth ring on the left bank camshaft only, as before.

Camshafts

New inlet camshafts are fitted as part of the continuously variable valve timing (VVT) system used on the 4.0L N/A engine. Cam profiles are changed and revised nose machining includes oilways for the new VVT unit. To ensure commonality, the changes to the camshaft nose are also applicable to the SC engine, which does not have the VVT system.

Valve Gear

Lighter tappets and modified valve springs are fitted to all engines.

Combustion Chamber

On all engines, the valve seats are changed to a three angle profile (more rounded) to improve gas flow.

CAMSHAFT POSITION SENSOR RING

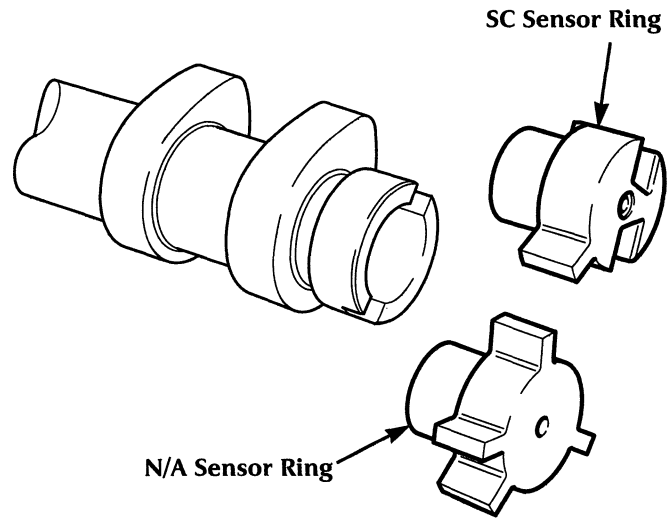

J.303.1188

CAM COVER

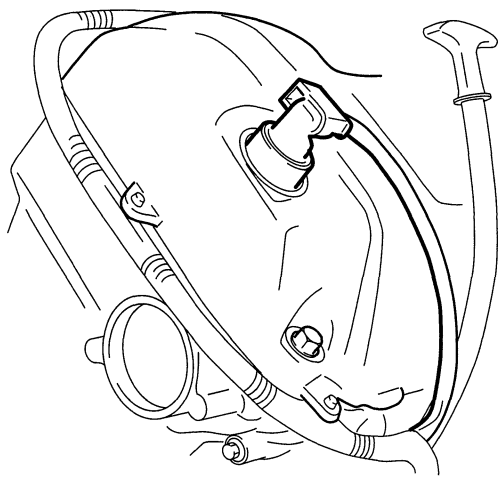

D.303.1187

Cam Covers
The cam covers are modified for the new type VVT oil control valve which projects upwards from each cylinder bank. The top of the valve protrudes through a hole in the cam cover to enable connection to the engine harness. On the SC engine without VVT, the new covers are used but the hole is moulded closed.

Camshaft Drive
All engines have modified secondary chain tensioner pivots. The SC engine has new sprockets to mate with the modified nose on the inlet camshaft.

Timing Cover
The solenoid oil control valves for the VVT system are relocated from the front of the engine and the access holes in the timing covers are now blanked off.

Lubrication

Oil Cooling
The external oil cooler is no longer fitted to N/A engines but is retained on the SC models. The oil diverter valve is therefore not required on N/A models.

Oil Pump
A new higher capacity oil pump is used to ensure that adequate pressure is available for the new VVT system. The pump is physically similar to the previous model and requires no changes to the engine.

Oil Temperature Sensor
The introduction of a fully oil controlled VVT system requires continuous monitoring of the oil temperature by the EMS. The sump is modified to accept an engine oil temperature (EOT) sensor which is fitted near the oil filter, immediately above the pressure sensor.

OIL TEMPERATURE SENSOR - N/A ENGINES

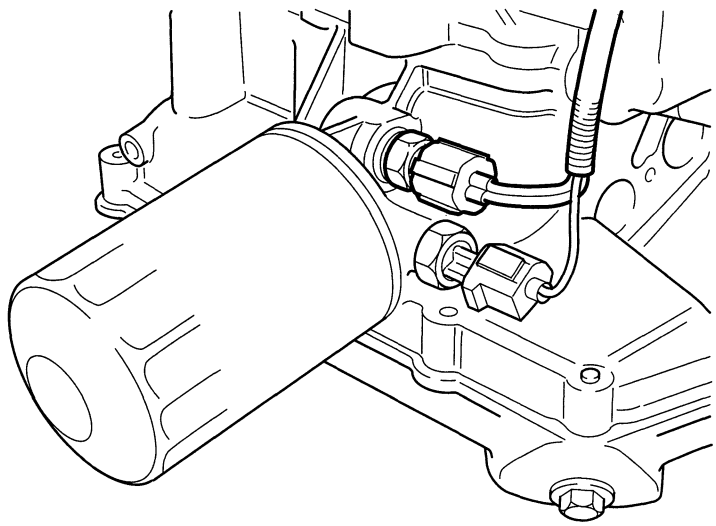

D.303.1162

Air Induction System

Air Intake
The intake ducting and air cleaner are modified to clear the new VVT oil control valve which protrudes through the top of the cam cover.

Induction Manifold
The induction manifold is modified to suit the new air assisted injectors and air feed system. Integral tubular air rails are located on each side of the manifold and fed at the centre point from detachable hoses. The fuel injectors are seated directly into the air rails and fuel is supplied to the top of the injector (top fed) from separate fuel feed rails bolted to the manifold. See 'Air Assisted Fuel Injection' (page 27).

Induction Elbow
The induction elbow has re-positioned fixing holes to accept the new throttle body.

Cooling System

Throttle Cooling Hoses
The throttle feed and return cooling hoses are re-shaped to suit the new throttle body.

INDUCTION MANIFOLD AND ELBOW

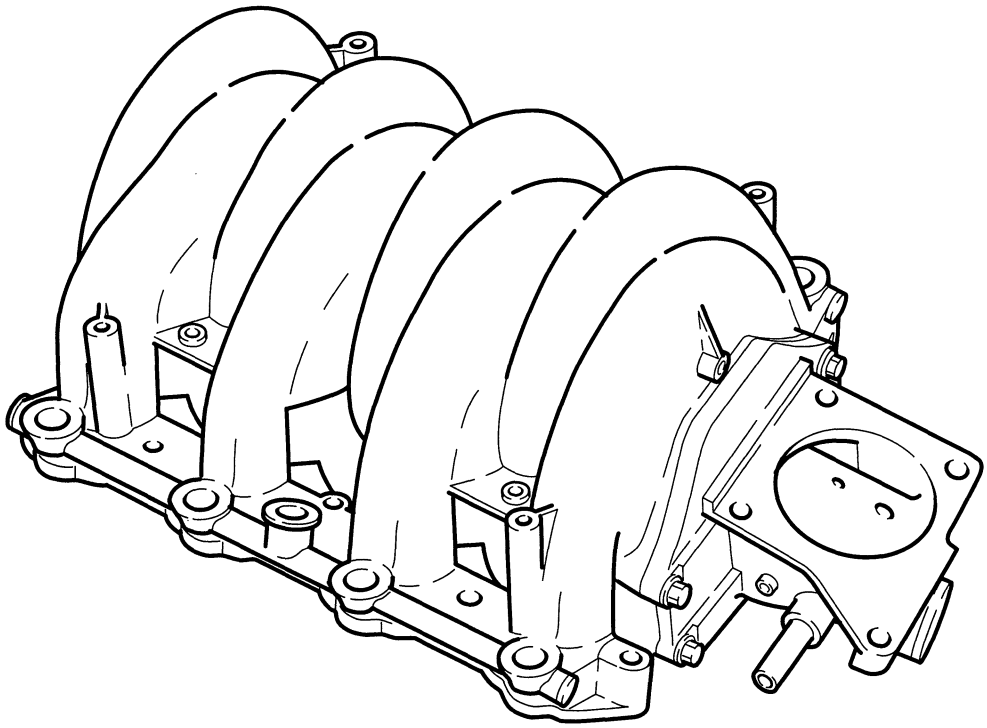

J.303.1249

Variable Valve Timing

The AJ27 variable valve timing (VVT) system is a further development of the system used on the AJ26 engine where the engine management system (EMS) selects one of two possible inlet cam positions relative to crankshaft angle.
The new linear VVT system provides continuously variable inlet valve timing over a crankshaft range of 48° ±2°. Depending on driver demand, engine speed/load conditions and EMS requirements, the inlet valve timing is advanced or retarded to the optimum angle within this range. Compared to the two position system, inlet valve opening is advanced by an extra 8°, providing greater overlap and increasing the internal EGR effect (exhaust gases mixing with air in the inlet port).

The linear VVT system provides a number of advantages:

- improves internal EGR, further reducing NOx emissions and eliminating the need for an external EGR system
- optimises torque over the engine speed range without the compromise of the two position system: note that specified torque and power figures are unchanged
- improves idle quality: the inlet valve opens 10° later, reducing valve overlap and thus the internal EGR effect (undesirable at idle speed)
- faster VVT response time
- VVT operates at lower oil pressure.

VARIABLE VALVE TIMING

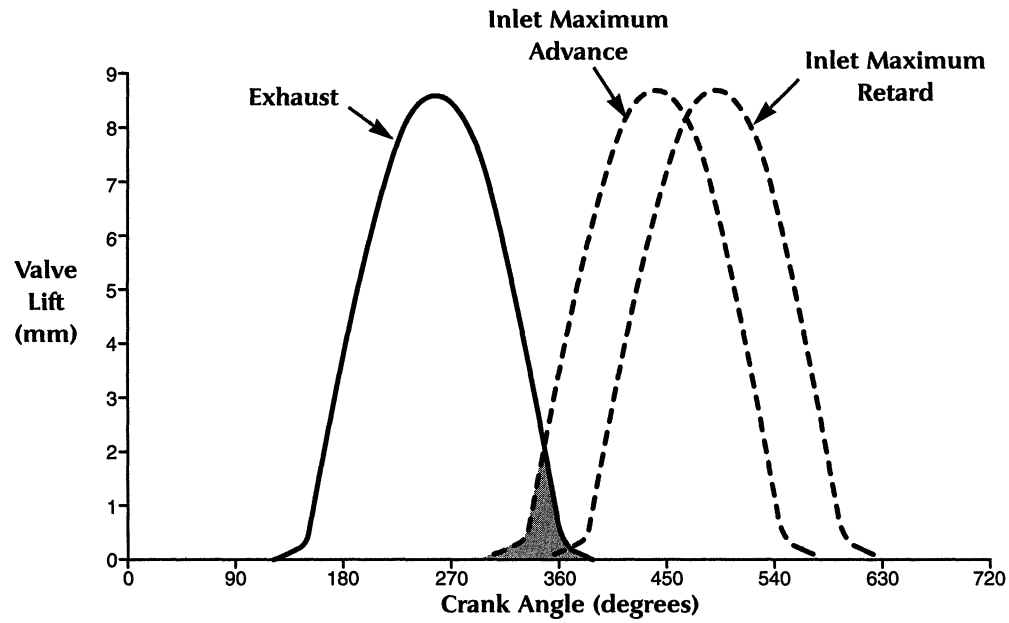

VVT Components

Each cylinder bank has a VVT unit, bush carrier and solenoid operated oil control valve which are all unique to the linear VVT system. The VVT unit consists of an integral control mechanism with bolted on drive sprockets, the complete assembly being non-serviceable. The unit is fixed to the front end of the inlet camshaft via a hollow bolt and rotates about the oil feed bush on the bush carrier casting. The bush carrier is aligned to the cylinder head by two hollow spring dowels and secured by three bolts.

The oil control valve fits into the bush carrier to which it is secured by a single screw. The solenoid connector at the top of the valve protrudes through a hole in the camshaft cover but the cover must first be removed to take out the valve.

Engine oil enters the lower oilway in the bush carrier (via a filter) and is forced up through the oil control valve shuttle spools to either the advance or retard oilway and through the bush to the VVT unit. Oil is also returned from the VVT unit via these oilways and the control valve shuttle spools, exiting through the bush carrier drain holes.

Note that only the bush carriers are left and right handed.

VARIABLE VALVE TIMING COMPONENTS

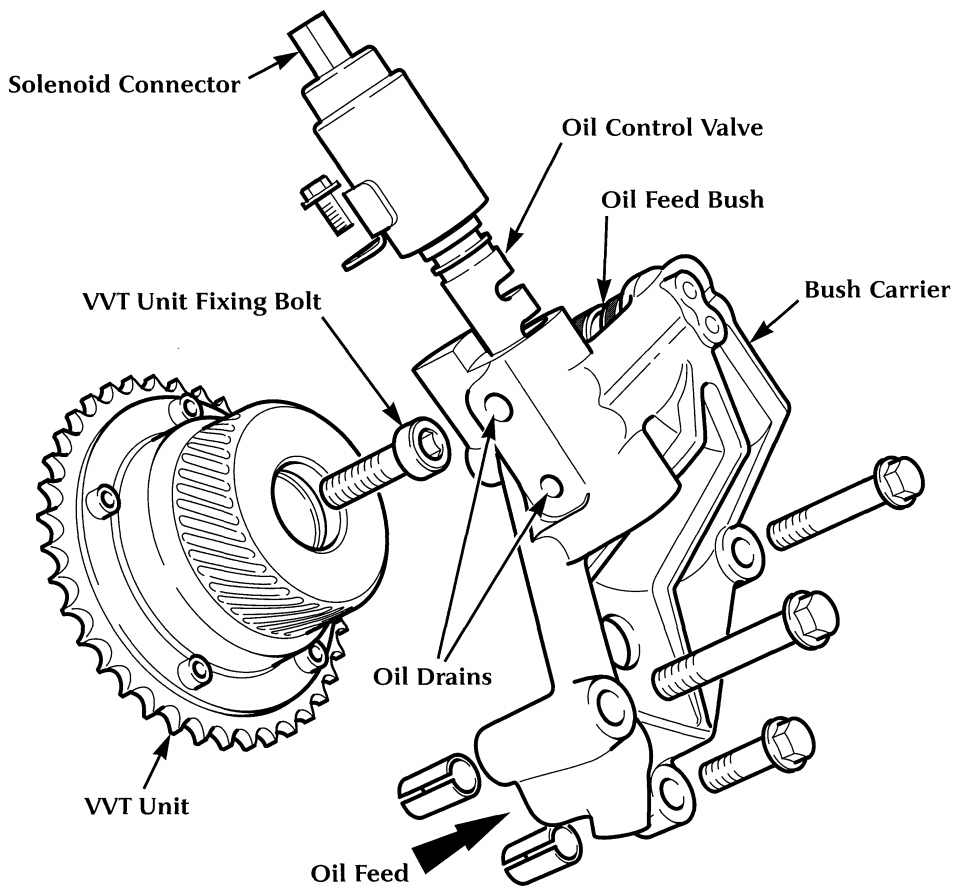

J.303.1168

Variable Valve Timing Unit

The VVT unit transmits a fixed drive via the secondary chain to the exhaust camshaft. The inlet camshaft is driven from the body of the unit via internal helical splines: when commanded from the EMS this mechanism rotates the inlet camshaft relative to the body/sprocket assembly to advance or retard the valve timing.

The VVT unit has three main parts: the body/sprocket assembly, an inner sleeve bolted axially to the nose of the camshaft and a drive ring/piston assembly located between the body and inner sleeve and coupled to both via helical splines.

The basic operation is similar to that of the two position unit: oil pressure applied in the advance chamber forces the drive ring/piston assembly to move inwards along its axis while rotating clockwise on the helical body splines. Since the drive ring is also helically geared to the inner sleeve but with opposite angled splines, the inner sleeve is made to rotate in the same direction, turning the camshaft. The use of opposing helical gears (the angle is more acute than in the two position unit) produces a relatively large angular rotation for a small axial movement, thus keeping the VVT unit to a compact size. Note that the inner sleeve does not move axially.

To move back to a retard position, oil pressure is switched to the retard chamber and the piston and rotational movements are reversed. The use of oil pressure to move the piston in both directions eliminates the need for a return spring for VVT operation (as in the two position system). However, a lighter pressure spring is fitted in the retard chamber to assist the piston assembly to revert to the fully retarded position with the engine stopped. Note that rotating the engine backwards from the stopped position will cause the VVT unit body to move relative to the camshaft, advancing the timing. To avoid the possibility of incorrect timing being set after any associated service work, reference must be made to JTIS 5 for the correct procedures.

Due to the use of bi-directional oil pressure actuation and light spring pressure, a much lower

VARIABLE VALVE TIMING UNIT

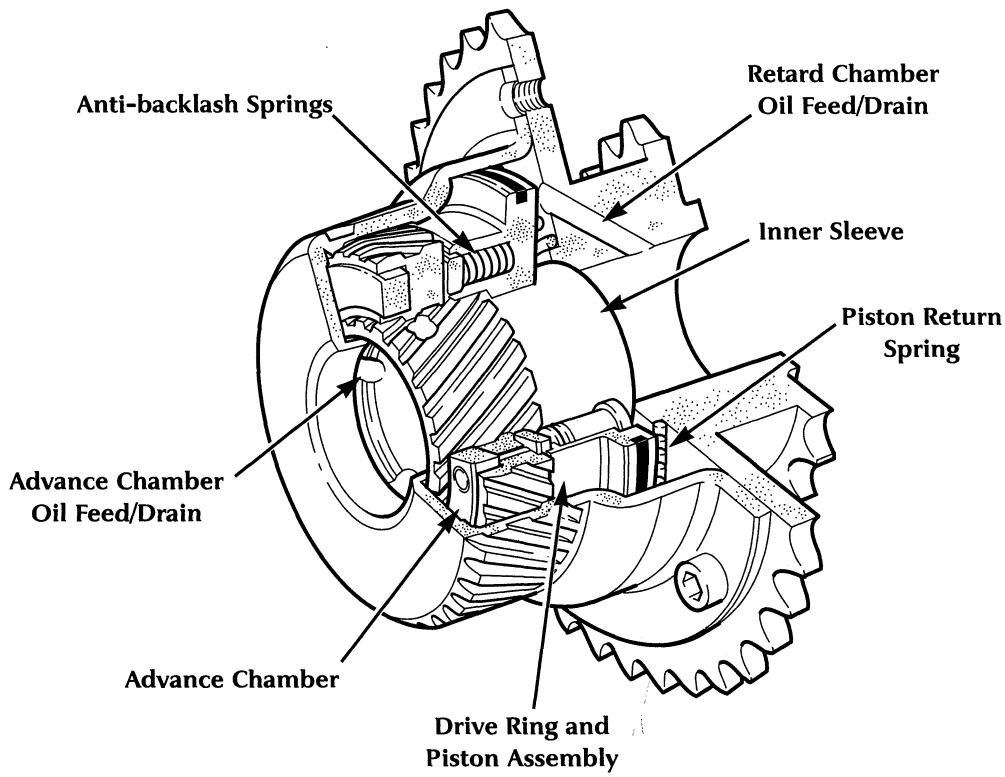

J.303.1167

oil pressure is required to advance the VVT unit, making its operation more consistent at high oil temperatures/low engine speed. Also, response times to move in the advance direction are reduced by approximately 50% compared with the two position actuator.

VVT Oil Control

(see illustration on page 14)

Engine oil is supplied to the VVT unit via the bush carrier and is switched to either the advance or retard side of the moving piston assembly by the oil control valve. The oil control valve consists of a four spool shuttle valve directly operated by a solenoid plunger and fitted with a return spring. It is a non-serviceable component.

To fully advance the cams, the solenoid is energised pushing the shuttle valve down. This action causes the incoming oil feed to be directed through the lower oilway in the bush carrier and into the advance oil chamber where it pushes on the piston/drive ring assembly. As the piston moves in the advance direction (towards the camshaft), oil is forced out of the retard chamber through oilways in the sprocket unit, camshaft, hollow fixing bolt, bush carrier and the shuttle valve from which it drains into the engine.

To move to the fully retarded position, the solenoid is de-energized, the return spring holds the shuttle valve in its upper position and the oil flow is directed through the bush carrier upper oilway into the VVT unit. Oil is channelled through the hollow VVT fixing bolt and via oilways in the camshaft and sprocket unit to the retard chamber where it acts on the moveable piston/drive ring assembly. As the piston moves, oil is forced from the advance chamber back through the shuttle valve to the engine.

VVT OIL CONTROL DIAGRAM

VVT UNIT IN FULLY RETARDED POSITION

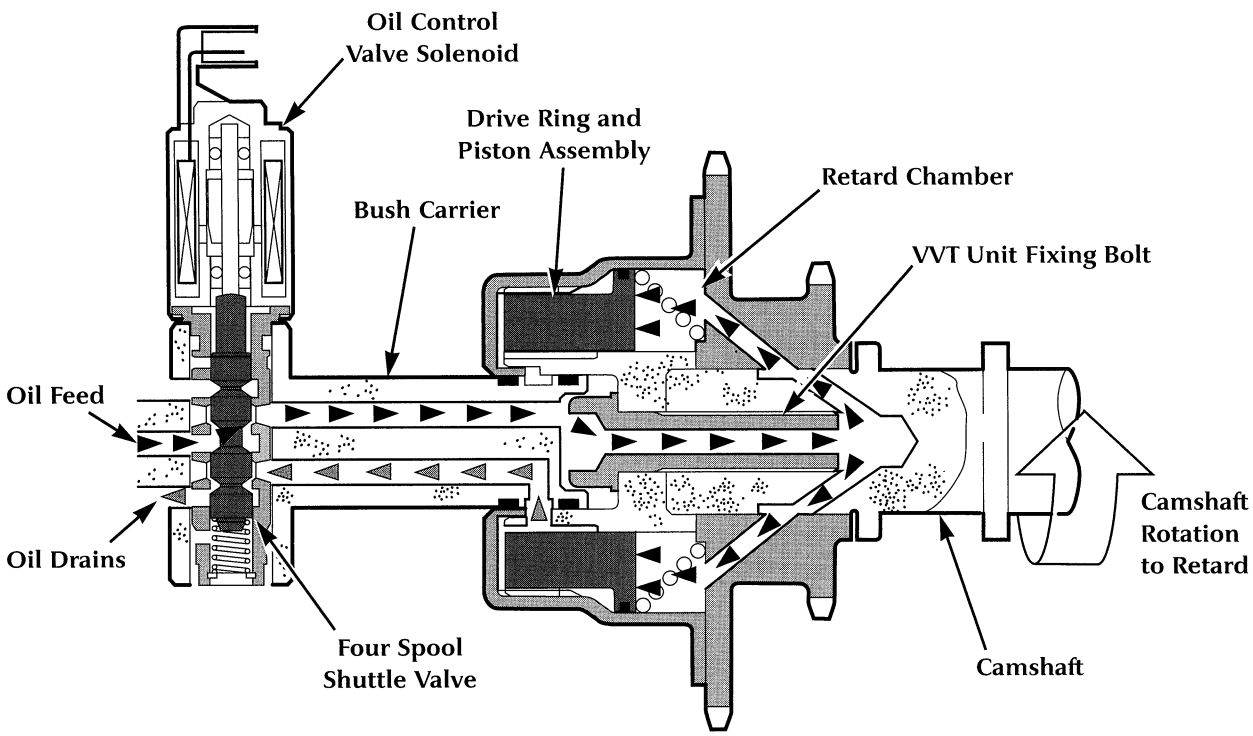

VVT UNIT IN FULLY ADVANCED POSITION

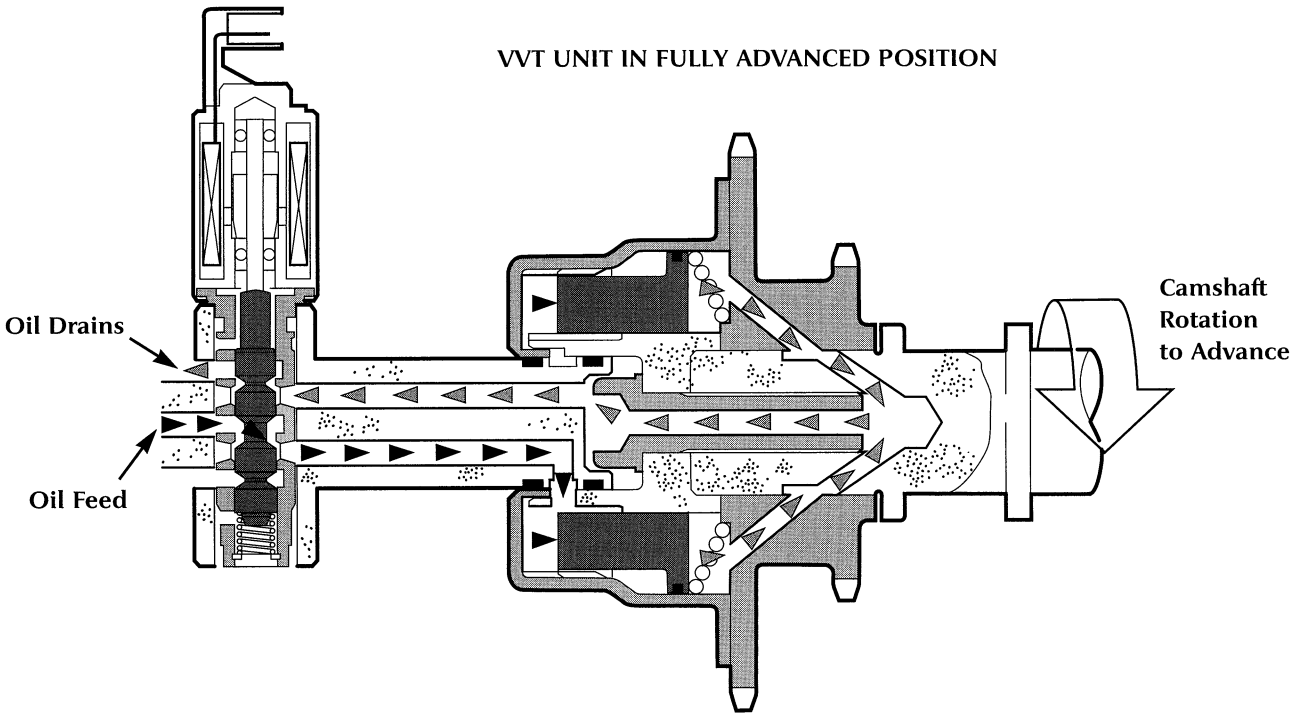

J.303.1169

VVT-EMS Control System

Closed Loop Control

Normally, continuously variable timing requires the VVT piston to be set to the optimal position between full advance and retard for a particular engine speed and load. To achieve this, the control signal applied to energise the oil control valve solenoid is pulsed on and off at a frequency of 300 Hz. The signal is pulse width modulated, ie the ratio of the on to off pulse periods (duty cycle) is varied by the EMS. Due to this rapid pulsing, the shuttle valve cannot follow the control signal but assumes a position between the limits of travel proportional to the duty cycle. An increasing duty cycle causes an increase in timing advance.

The shuttle valve is continuously controlled by the EMS to maintain a given cam angle. The actual position of the camshaft is monitored by a magnetic sensor which generates pulses from the toothed sensor ring keyed on to the end of the camshaft and transmits them to the EMS. If a difference is sensed between the actual and demanded positions, the EMS will attempt to correct it. The new cam sensor fitted to A bank allows each bank to have its own feedback loop. The four tooth cam sensor rings increase the cam position feedback frequency, providing the enhanced control required by the new VVT system. The use of four tooth sensor rings also improves starting (see Engine Management).

Engine Oil Temperature

Engine oil properties and temperature can affect the ability of the VVT mechanism to follow demand changes to the cam phase angle. At very low oil temperatures, movement of the VVT mechanism is sluggish due to increased viscosity and at high temperatures the reduced viscosity may impair operation if the oil pressure is too low. To maintain satisfactory VVT performance, an increased capacity oil pump is now fitted to all engines and an EOT sensor to N/A engines (see Lubrication). The VVT system is normally under closed loop control except in extreme temperature conditions such as cold starts at well below 0°C. At extremely high oil temperatures, the EMS may limit the amount of VVT advance to prevent the engine stalling when returning to idle speed. This could otherwise occur because of the slow response of the VVT unit to follow a rapid demand for speed reduction. Excessive cam advance at very light loads produces high levels of internal EGR which may result in unstable combustion or misfires.

On-board Diagnostics

The diagnostic system is monitored for any registered OBDII fault codes for the cam sensors, VVT oil control valve solenoids and relevant sensors (IAT, ECT, MAF, TP); if a fault is detected, VVT control is disabled, causing the inlet timing to revert to the fully retarded state.

Throttle Body

A new throttle body is fitted to the AJ27 4.0L N/A engine. The SC engines retain the existing electronic throttle with mechanical guard.
The main features of the new throttle body are:

- full motorized control of the throttle valve from the engine management system (EMS)
- mechanical, cable operated 'limp home' fail safe mode with restricted throttle opening
- mechanical, electrical and software safety features
- cruise control does not require vacuum actuation
- built-in air assisted fuel injection control (AAC) valve with integral air feed (see section on AAI).

Throttle Operation
The throttle body contains two moving assemblies: the accelerator input assembly which provides the driver demand to the EMS control loop: and the motorized throttle valve driven and controlled by the EMS in accordance with driver demand and other EMS factors. In normal operation, there is no mechanical coupling between the two assemblies.

The accelerator input assembly comprises the throttle cable lever, pedal position sensor and accelerator link lever. The drivers pedal is linked by a conventional Bowden cable to the throttle cable lever; two return springs are fitted and in limp home mode, each spring is capable of closing the throttle valve. The pedal position sensor consists of twin potentiometers which provide separate analogue input signals, proportional to driver demand, to the EMS. As a further safety feature the two potentiometers have different input/output characteristics for unique signal identification and any disagreement between the expected outputs causes the EMS to switch the throttle to the limp home mode.
The throttle valve is coupled to a dc motor via

ELECTRONIC THROTTLE

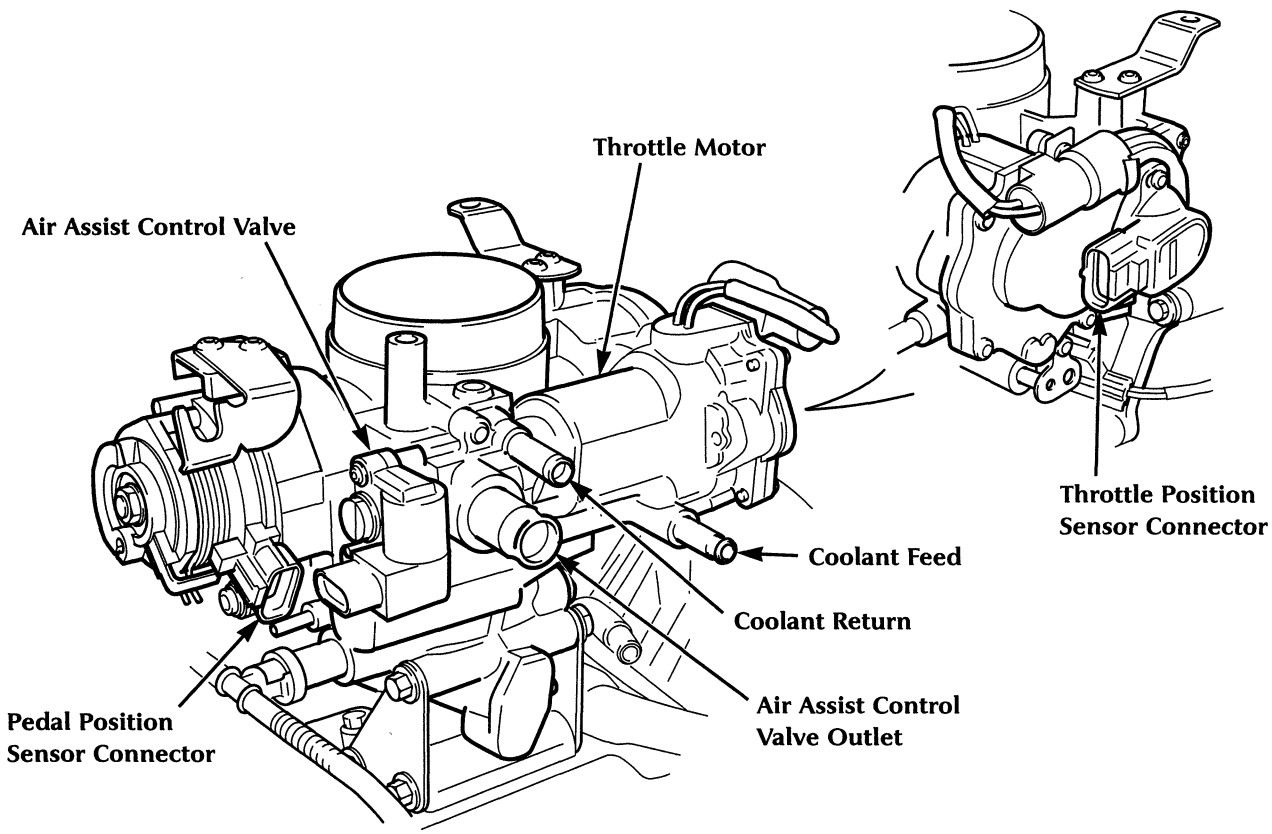

D.303.1166

reduction gears and quadrant and is positively driven by the EMS between the fully closed and fully open positions, in both directions, without any intervening mechanisms, ie it is a 'full authority' system. A twin potentiometer sensor on the motor end of the throttle shaft provides direct feedback of the actual valve angle to the EMS and is similar to the pedal position sensor (above) in operation.

The limp home mechanism consists of the accelerator input shaft link lever and the two throttle shaft levers, all three levers being interlocked for limp home operation (below). On the throttle assembly, one lever is fixed to the end of the shaft and the second, the 'limp home' lever, pivots about the shaft. The two levers are connected by a spring and the throttle return spring is also connected to the limp home lever. As the throttle rotates, the action of the throttle lever (valve opening) and the springs (valve closing) maintain the two levers in contact. At the idle speed position, there is an angular separation between the accelerator link lever and the limp home lever and under normal closed loop control this difference is maintained (subject to EMS adjustments) as both input and drive assemblies rotate.

Limp Home Operation

If a failure in the throttle mechanism or control system results in the EMS selecting the limp home mode, motor power is cut by de-energizing the motor supply relay and/or by de-activating the PWM motor control signal.

In limp home mode, the throttle valve is operated mechanically from the accelerator pedal and throttle opening is restricted to a range from idle to a maximum of approximately 30°. In this condition the accelerator input shaft link lever is mechanically coupled to the throttle shaft levers, enabling the shaft to be rotated against the unpowered motor and gearing.

With power removed from the motor, the throttle shaft cannot follow the accelerator shaft. Due to the angular difference between the input shaft link lever and the limp home lever, pressing the accelerator pedal from the idle speed position causes the accelerator input shaft to rotate for approximately 60° without any throttle response until the two levers engage. When the link lever contacts the limp home lever, causing it to rotate, the throttle valve is pulled open by the limp home spring; with the pedal fully depressed the throttle valve is open to a maximum of approximately 30°. On releasing the accelerator pedal, the throttle return spring causes the limp home lever to rotate to its stop at the throttle idle speed position. If loss of motor power occurs when the throttle is open beyond the idle position, the limp home lever will close to the point where it contacts the link lever. If the throttle has been driven closed, ie past the idle position, when loss of power occurs, the limp home spring will return it to the idle position.

When the throttle is in limp home mode, the EMS adjusts the fuel metering as appropriate to control engine power, eg at low throttle openings a number of cylinders may be cut.

Cruise Control

Since the throttle valve is fully controlled by signals from the ECM without any additional mechanical assistance, there is no requirement for the vacuum actuated cruise control components used on the AJ26 engine. The vacuum actuator, control valves and reservoir are therefore deleted and cruise control is an EMS software function only. Driver cruise controls are unchanged.

THROTTLE OPERATION

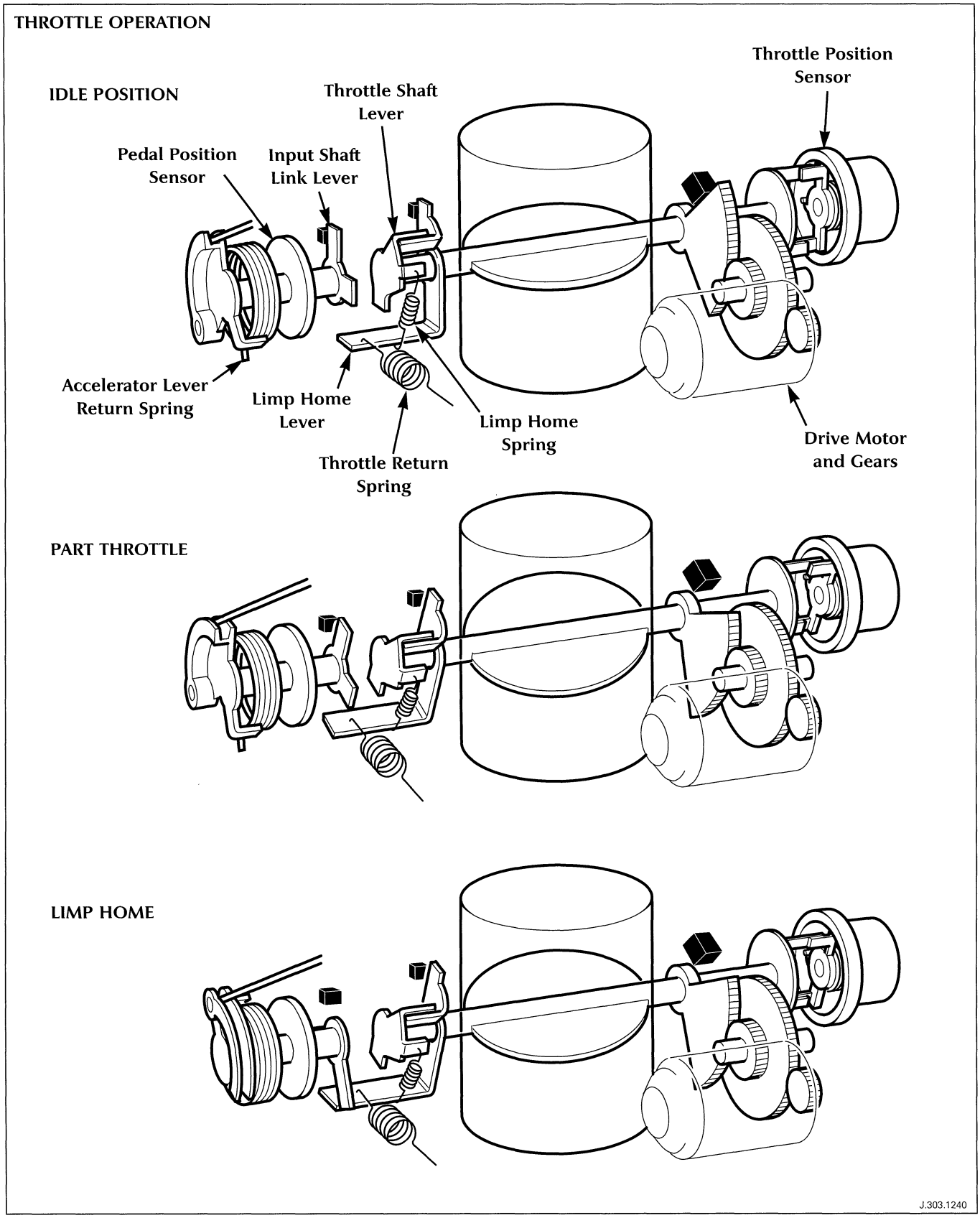

Introduction

A number of changes are made to the N/A engine management system relating to improved emission control, starting and new sensors and actuators. SC engine sensors and EMS operation are unchanged:

- new continuously VVT system improves EGR to reduce NOx
- air assisted fuel injection reduces cold start HC emissions and improves idle quality
- new cam sensors/sensor rings for faster starting and VVT control
- changes to the ignition and throttle control programming for faster catalyst warm up
- improved catalysts and oxygen sensors to give better AFR control
- new crank sensor/timing disc
- new integrated coil-on-plug units
- new knock sensors and ECM changes produce improved cylinder identification
- new removable MAF and IAT sensors
- new ECM
- updated diagnostics (new sensors and actuators).

Engine Start

Faster engine firing on start up is assisted by the new four toothed sensor rings on each camshaft. Each sensor ring provides 4 pulses per engine cycle (720°) to the ECM compared to 1 pulse from the previous single tooth sensor ring fitted to B bank. The sensor teeth are asymmetrically positioned and produce a corresponding pulse pattern over the engine cycle which is compared with the crank sensor output (one missing pulse per revolution). This feature enables the EMS to more quickly identify where the engine is positioned in the firing order and thus trigger ignition and fueling to fire the correct cylinder.

In normal operation the EMS uses the inputs from the crank sensor and the A bank cam sensor for cylinder identification and ignition/fuel synchronisation. If the A bank sensor system fails, the EMS switches to the B bank inputs. If the crank sensor system fails, the engine will start and run using the inputs from both cam position sensors.

Under all conditions, the cam sensors retain their VVT functions (see VVT section).

Catalyst Warm-up

Software changes are introduced to bring the catalysts up to working temperature as quickly as possible from cold to minimize emissions. For a short period after engine start, the ignition timing is retarded and the idle speed increased. The effect is to increase the exhaust gas temperature and flowrate and more quickly bring the catalyst up to the 'light off' point when it becomes effective. Idle speed levels, amount of ignition retardation and the duration for which they are applied are programmed against the engine water temperature.

EMS Sensors

ENGINE SENSORS AND ACTUATORS

1. Intake air temperature (IAT) sensor
2. Mass air flow (MAF) sensor
3. Air assist control (AAC) valve
4. Throttle position (TP) sensor
5. Throttle motor
6. Accelerator pedal position (APP) sensor
7. Fuel injectors
8. Camshaft position (CMP) sensors
9. Engine coolant temperature (ECT) sensor
10. Knock sensors
11. Coil-on-plug ignition modules
12. VVT oil control valve
13. Upstream linear heated oxygen (HO2) sensors
14. Downstream heated oxygen (HO2) sensors
15. Crankshaft position (CKP) sensor
16. Engine oil temperature (EOT) sensor

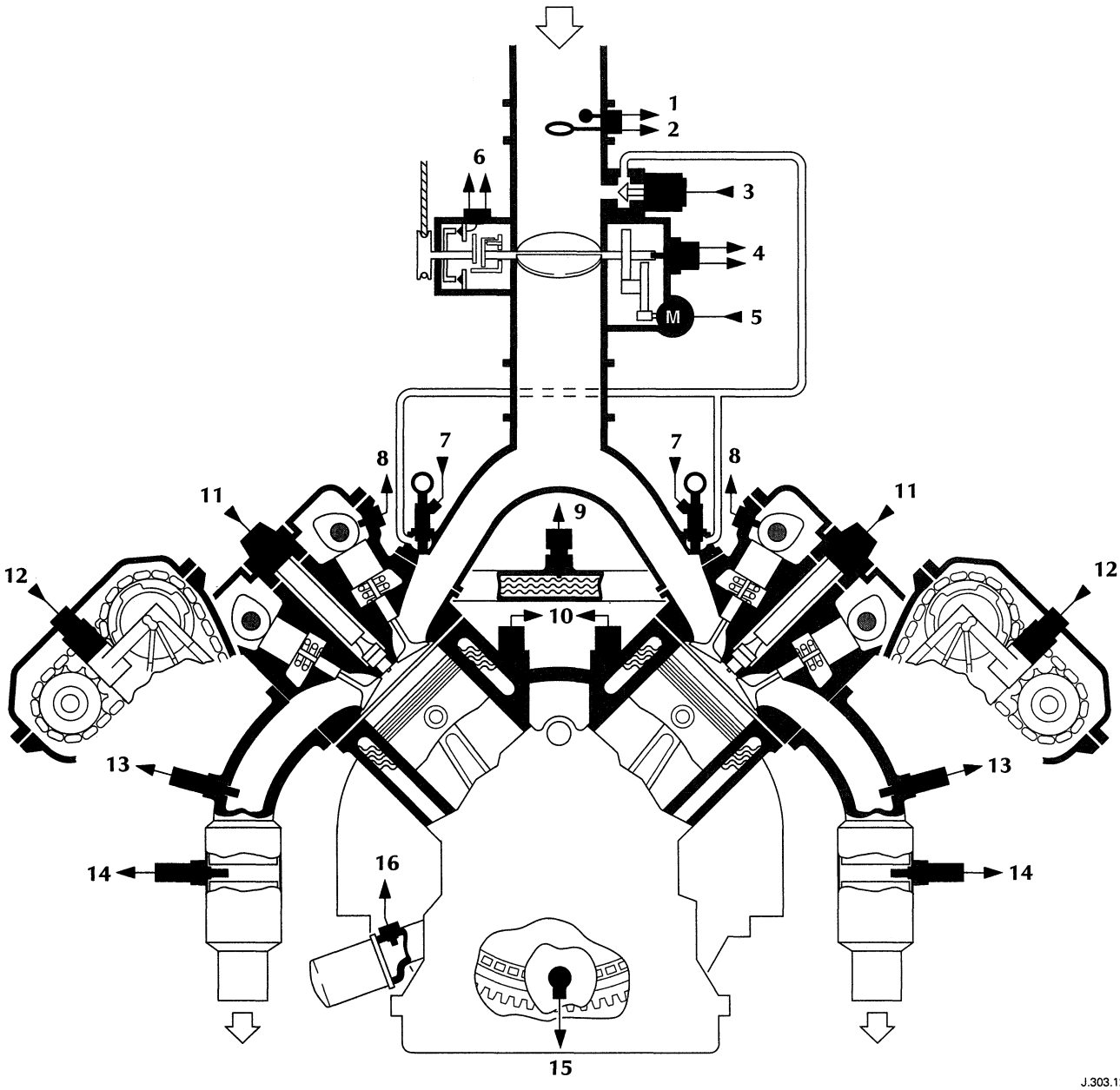

J.303.1241

Crankshaft Timing

Crankshaft Position Sensor

A new type crankshaft position (CKP) sensor with fixed connector (no flying lead) is fitted.

CRANKSHAFT POSITION SENSOR

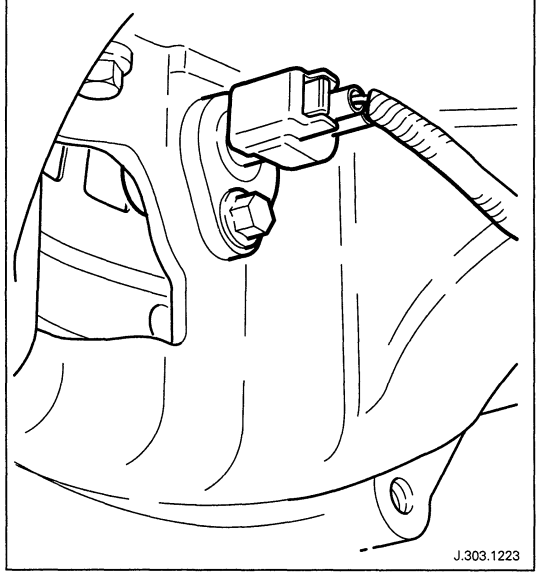

Crankshaft Timing Disc

The crankshaft timing disc, on the front face of the drive plate, has the long slot modified so as to provide 35 sensor spokes plus 1 missing spoke (was 34 and 2). This generates a corresponding 35 pulses and identification gap, per revolution, to the ECM.

CRANKSHAFT TIMING DISC

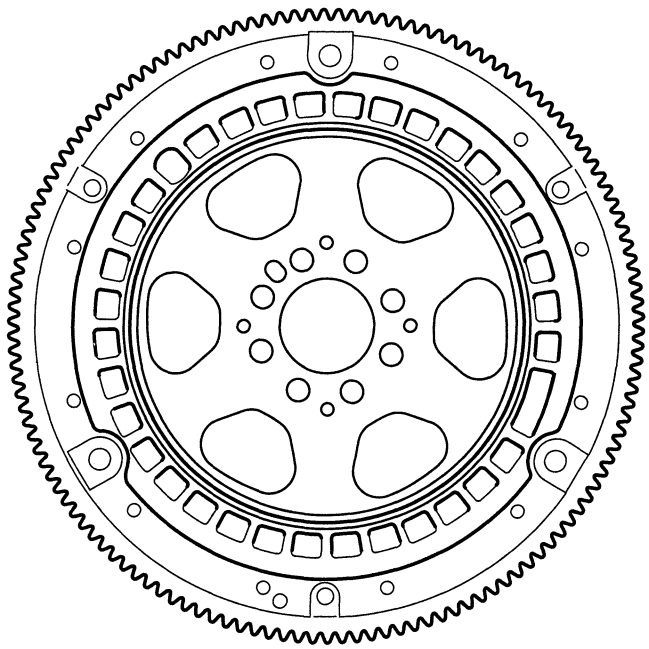

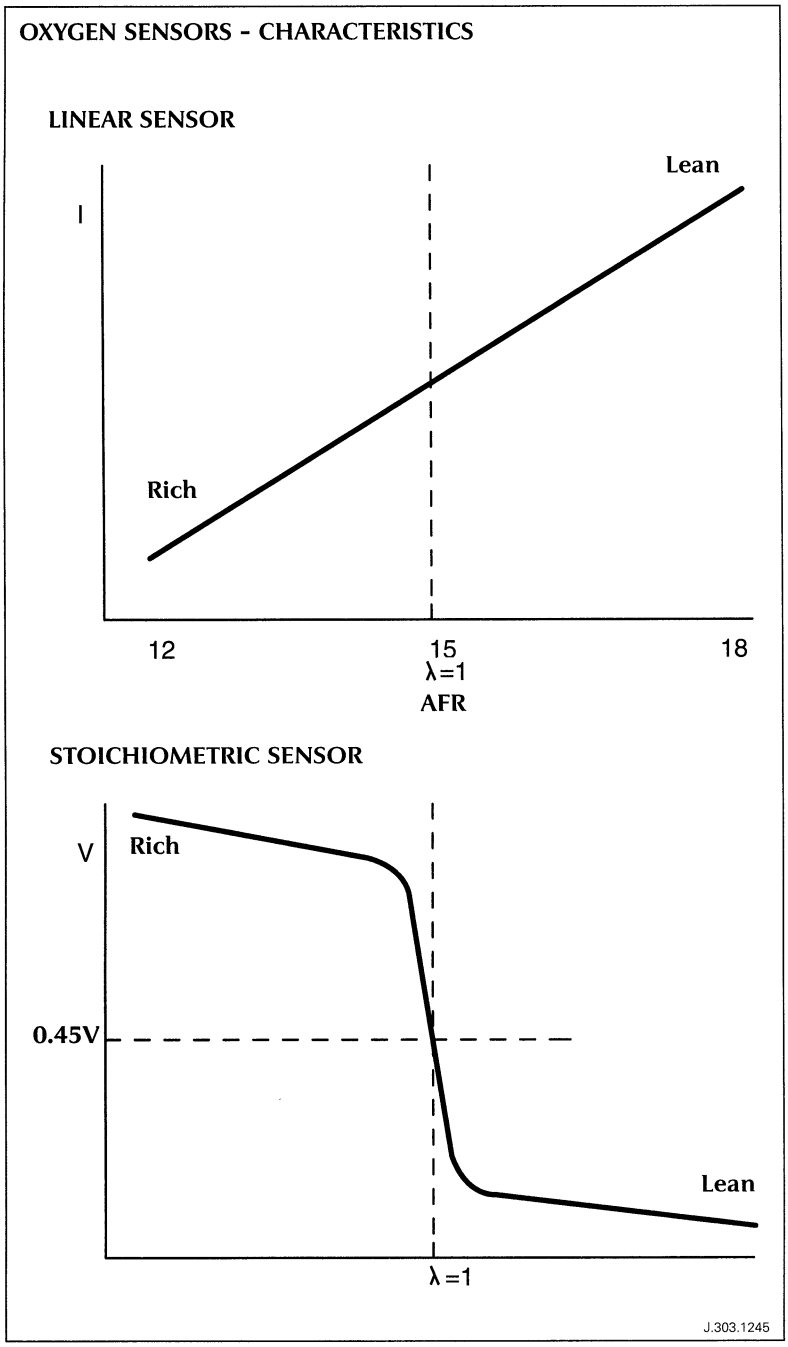

Exhaust Catalysts and Sensors

Linear Oxygen Sensor

A new type of heated oxygen sensor is fitted in the upstream position for improved AFR control under varying engine conditions. The sensor has a constant voltage output with a linear current/AFR characteristic over an approximate AFR range from 12:1 to18:1. This linear characteristic enables the sensor to provide very accurate feedback control. An HO2 sensor of the type used previously in the upstream position is fitted in the downstream position and since it has a step response at stoichiometric AFR (sharp change in output voltage), provides a reference for the upstream linear sensor. The stoichiometric output of the downstream HO2 sensor (450mV) is maintained more accurately than before by the use of the upstream linear sensor for feedback control.

The downstream HO2 sensor is also used to monitor any deterioration in the efficiency of the catalyst and, if necessary, trigger a fault code (DTC).

Split Element Catalyst

To meet the requirements for lower emissions in NAS markets, a modified catalytic converter is introduced on N/A models. This is necessary to overcome the problem of detecting changes in unwanted emissions (eg due to catalytic deterioration) at these very low levels. To improve detection, the spacing between the two internal ceramic catalytic elements has been increased to allow the downstream HO2 sensor to be relocated to a new position between the two elements. Due to the lower efficiency of the first (top) element in reducing emissions (compared to the second element), the level of unwanted gases at this point is sufficiently high to ensure accurate monitoring. The upstream linear HO2 sensor and downstream HO2 sensor are fitted.

SPLIT ELEMENT CATALYST

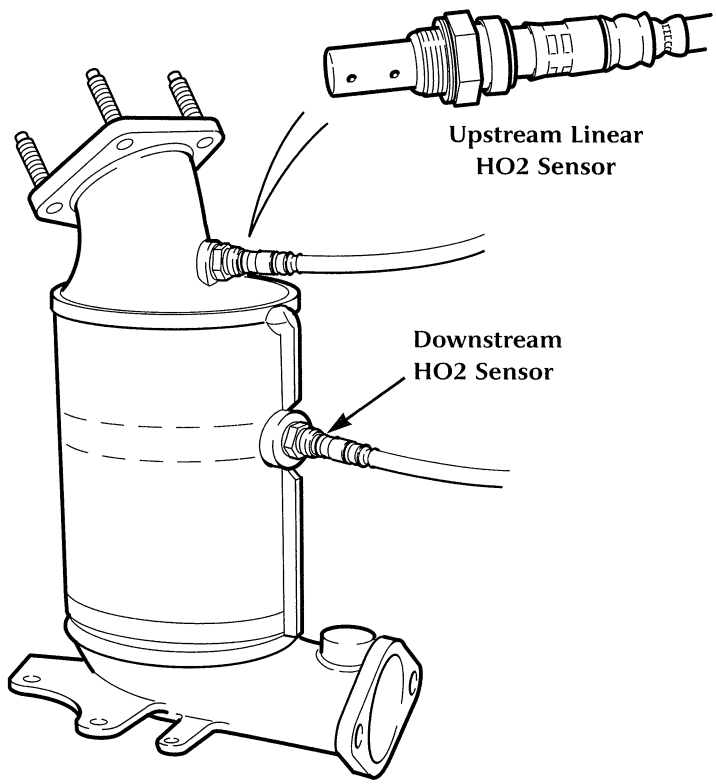

J 309.079

KNOCK SENSORS

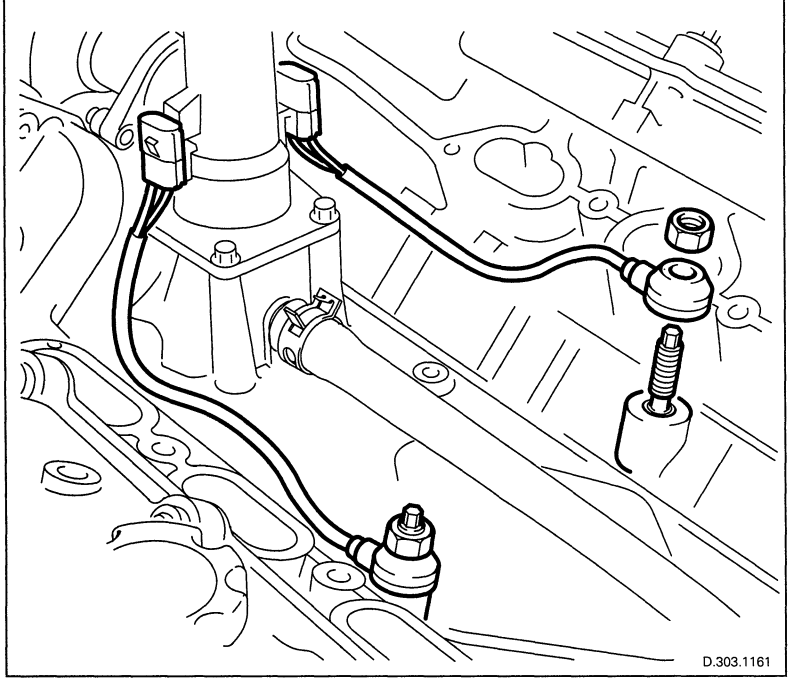

Knock Sensors

New type knock sensors are fitted to all N/A engines. The sensors are of an annular construction and are mounted via a stud and nut to the cylinder head. To improve cylinder identification, particularly at higher engine RPM, switched capacitive filters are incorporated in the new ECM. Knock sensing performance is further enhanced by the use of improved signal processing software.

MAF AND AIR TEMPERATURE SENSORS

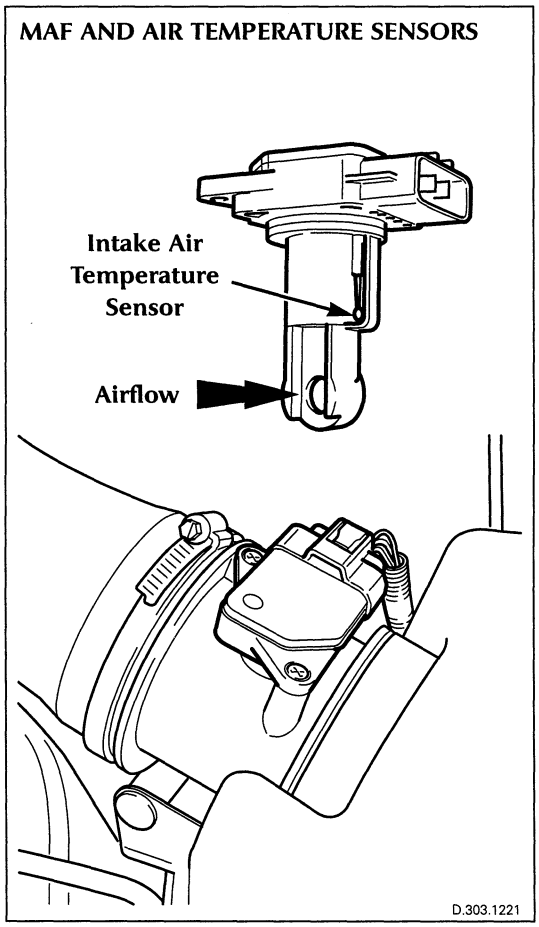

Air Intake Sensors

On all N/A models, a new type mass airflow/temperature sensor and separate air duct replaces the previous integrated assembly. The MAF sensor and IAT sensor are combined in an integral, plug-in unit, secured by two screws to the duct.

Ignition System

Spark Plugs

Double platinum spark plugs are now fitted to 4.0L N/A engines and have a service life of 160,000km (100,000m). See engine specification.

Coil-on-plug Units

A new type coil-on-plug unit, which incorporates its own ignition control module, replaces the previous coil only type and the two separate drive modules. The new units are of integral, encapsulated construction with a fixed 4-pin connector.

Coil-on-plug Operation

The ignition control module is triggered directly from the ECM and drives the coil primary circuit, controlling current amplitude, switching point and energisation period. Each ignition control module also provides a monitor output to the ECM. When an ignition trigger signal is received, an acknowledge pulse is sent to the ECM if the current drive to the coil primary is satisfactory. This pulse is initiated when the current reaches 2 Amps and is terminated at 4 Amps. If the trigger pulse is not received or the coil current does not rise to 2 Amps, the monitor line will remain at logic high, signalling an ignition failure to the ECM. Two ignition monitor inputs are used on the ECM as before, but with each group of four monitor lines wire spliced together.

COIL-ON-PLUG IGNITION UNIT

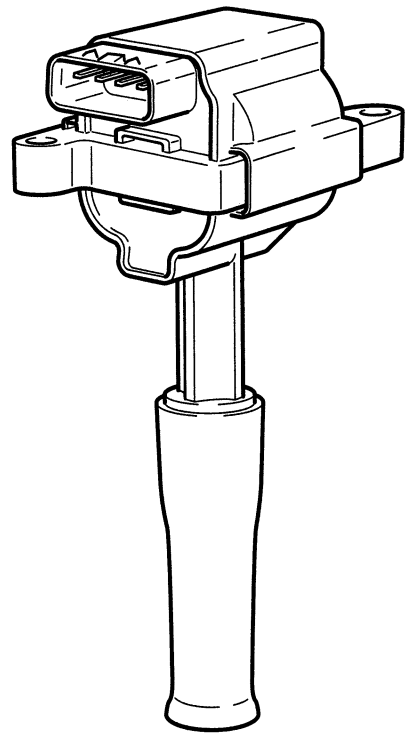

J.303.1226

COIL-ON-PLUG IGNITION SCHEMATIC

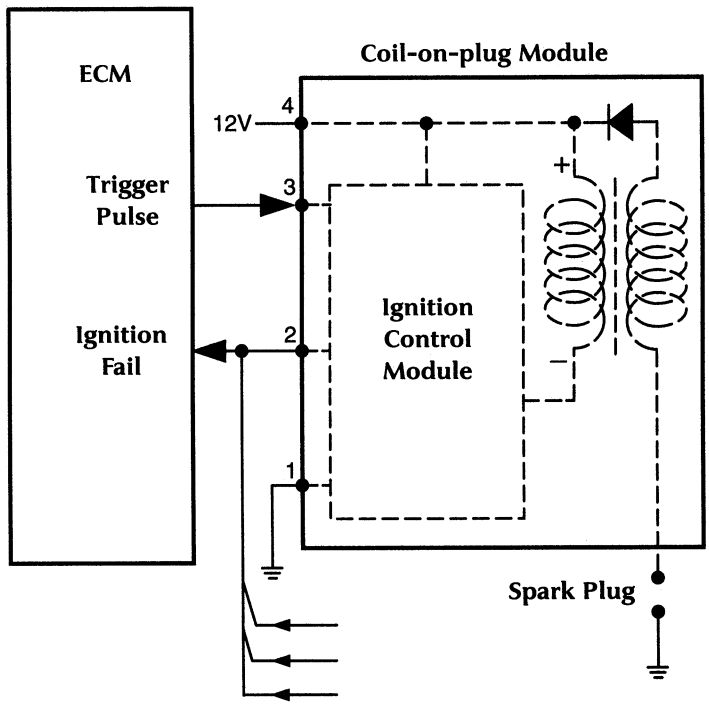

J.303.1227

Engine Control Module

ENGINE CONTROL MODULE

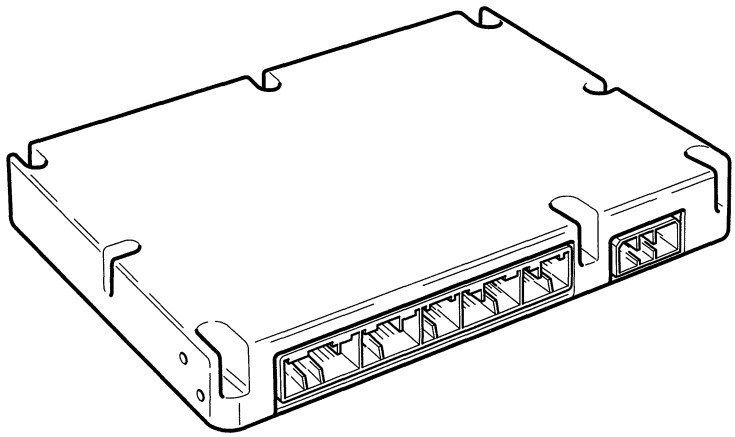

J 418.227

A new ECM is fitted with changes to the internal hardware and external connectors in addition to programming modifications. The module is physically similar but is slightly smaller in depth to the previous unit. The new connectors have changed pin-outs and reference should be made to the Electrical Guide for details.

The ECM has increased processing power and memory capacity. Changes are also made to the interfacing circuits to accommodate the new sensors and actuators.

Software changes are introduced to comply with current and future emission control and OBDII diagnostic requirements for all markets.

ECM Wiring Harness Connectors

The engine harness and ECM harness connectors are modified to suit the new ECM, sensors and actuators.

ECM CONNECTORS

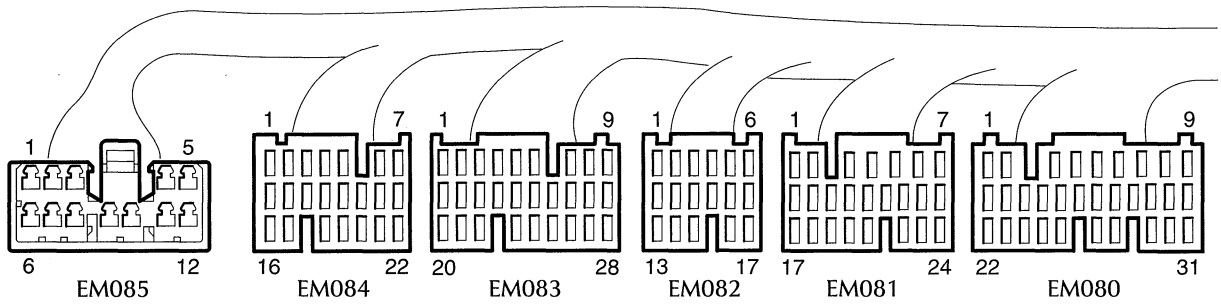

J 418.228

Air Assisted Fuel Injection

Air assist injection (AAI) is fitted to the AJ27 4.0L N/A engine to improve the atomization of the fuel spray pattern when cold, providing the following benefits:

- reduces hydrocarbon (HC) emissions produced by combustion
- by improving combustion stability when cold, allows the use of increased ignition retardation for faster catalyst warm up, thus producing a further reduction of HCs.

The system uses manifold vacuum, under cold start/part throttle conditions, to draw air through a modified injector nozzle, producing a jet which mixes with the fuel spray to increase atomization. At higher engine loads, the vacuum is insufficient to have this effect. The injector air assistance supply is controlled by the engine management system.

Injector Fuel and Air Supply

Operation is based on the use of top (fuel) fed injectors with an air feed around the nozzle regions and therefore requires a modified induction manifold. The injectors are seated in two air supply rails which are integral with the manifold (similar to the AJ26 fuel rails). The rails are closed at both ends and are center fed via plastic hoses and 'T' piece from the air assist control (AAC) valve. Two fuel rails, with a connecting cross-over pipe, form a detachable assembly and are a push fit onto the injectors to which they are secured with clips. The fuel rails are then bolted to the induction manifold.

INDUCTION MANIFOLD FOR AIR ASSISTED INJECTION

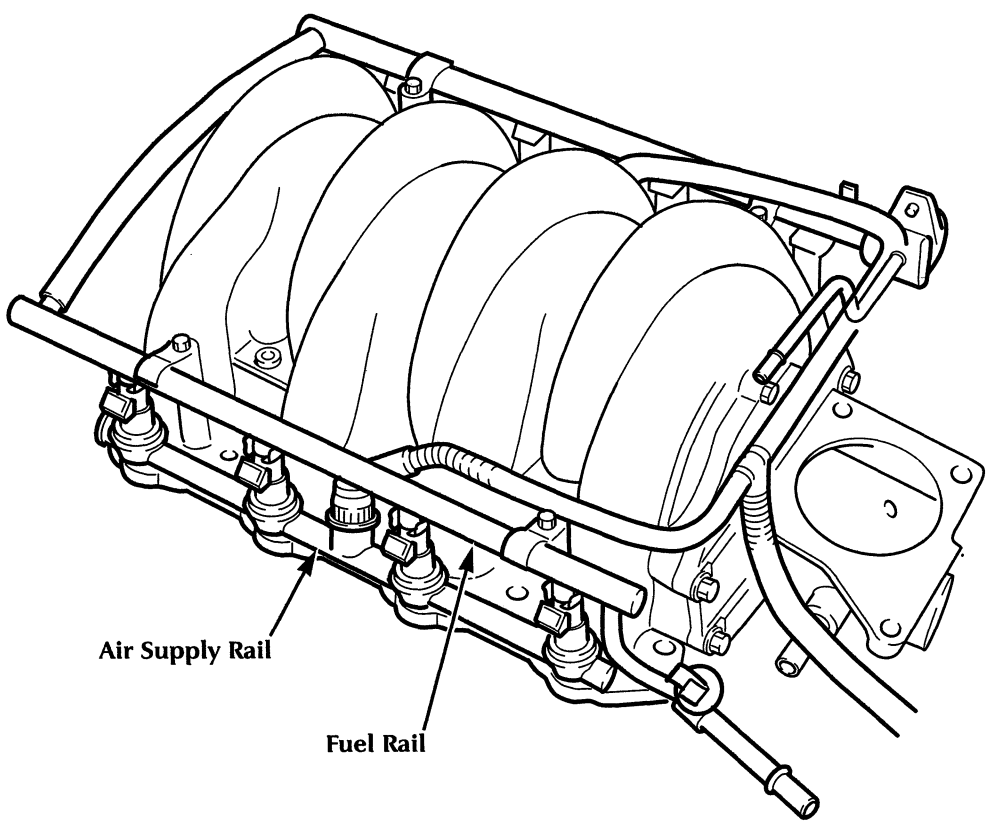

D.303.1163

AIR ASSISTED FUEL INJECTOR

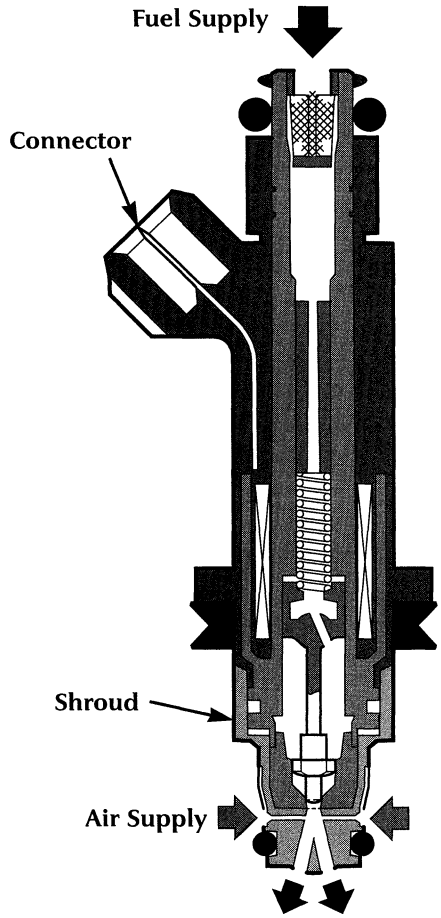

J.303.1190

Fuel Injectors

The fuel injectors are top fed, solenoid controlled devices with conventional fuel delivery operation but have a plastic shroud fitted over the nozzle end. Air from the supply rail is drawn by manifold vacuum through four small holes in the side of the shroud and past the fuel nozzle to exit via the two spray orifices in the shroud. When fuel is injected into this airflow, an improved spray mixture with reduced droplet size is produced. An effect of assisted injection is to slightly increase the convergence of the two spray patterns as they enter the cylinder head inlet ports, producing wall wetting; this is reduced by re-profiling changes to the inlet ports.

FUEL RAIL ASSEMBLY

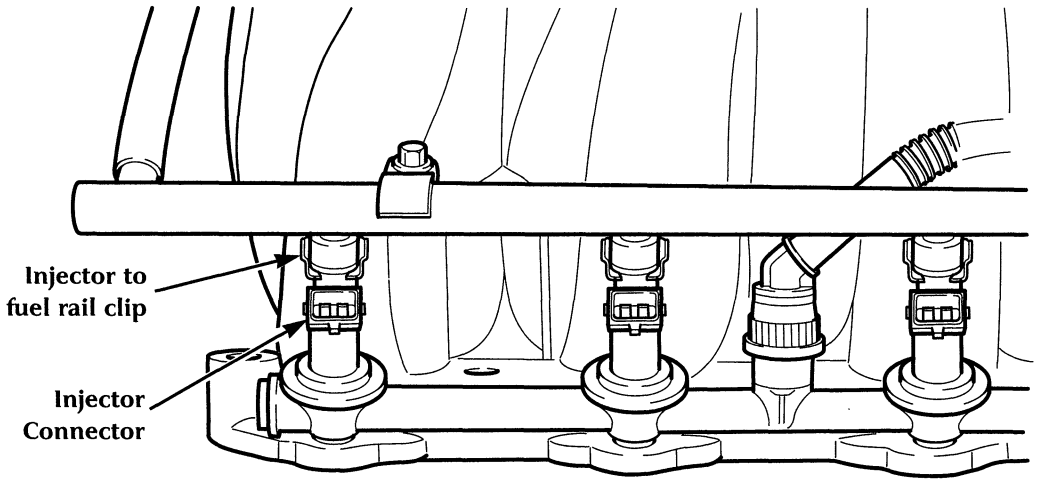

D.303.1183

Air Assist Control Valve
The air supply to the injectors is controlled by the solenoid operated air assist control (AAC) valve which is bolted to the throttle body. The control valve receives air, via an integral passage in the throttle body, from an entry hole in the upper throttle bore above the throttle valve.

EMS Control
The AAC valve is driven by a pulse width modulated (PWM) signal at 5V amplitude and opens in direct proportion to an increase in the duty cycle. The valve is fully open from cold until 60°C (water temperature) when a 50% duty cycle is applied and at 70°C the valve is fully closed: above this temperature air assistance is not required. Note that idle speed is controlled as before by the throttle valve.

INJECTOR AIR ASSISTANCE SUPPLY LAYOUT

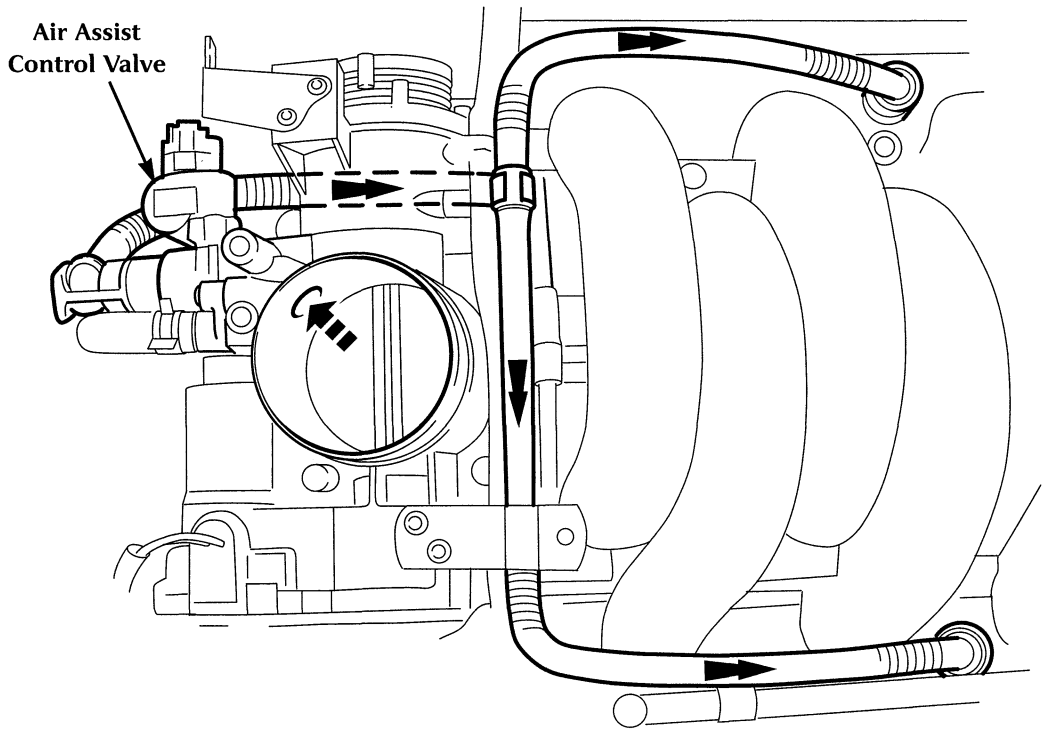

D.303.1098

Evaporative Emissions Control

XK8 On-board Refueling Vapour Recovery

Canisters

The evaporative emissions vapour purge system is now enhanced to include On-board Refueling Vapour Recovery (ORVR) for the 4.0L N/A engine and is similar to the system used on the sedan. Due to the large bore hoses required, the canisters and associated components are relocated to the rear of the vehicle behind the rear suspension/final drive assembly. The canister close valve and vapour hoses are fixed directly to the bodywork. The canisters are bolted directly and via brackets to the body. The atmospheric vent pipe from the second canister is routed through a hole in the RH suspension housing with the CCV air filter fitted to the end of the pipe inside the housing.

XK8 ORVR CANISTERS

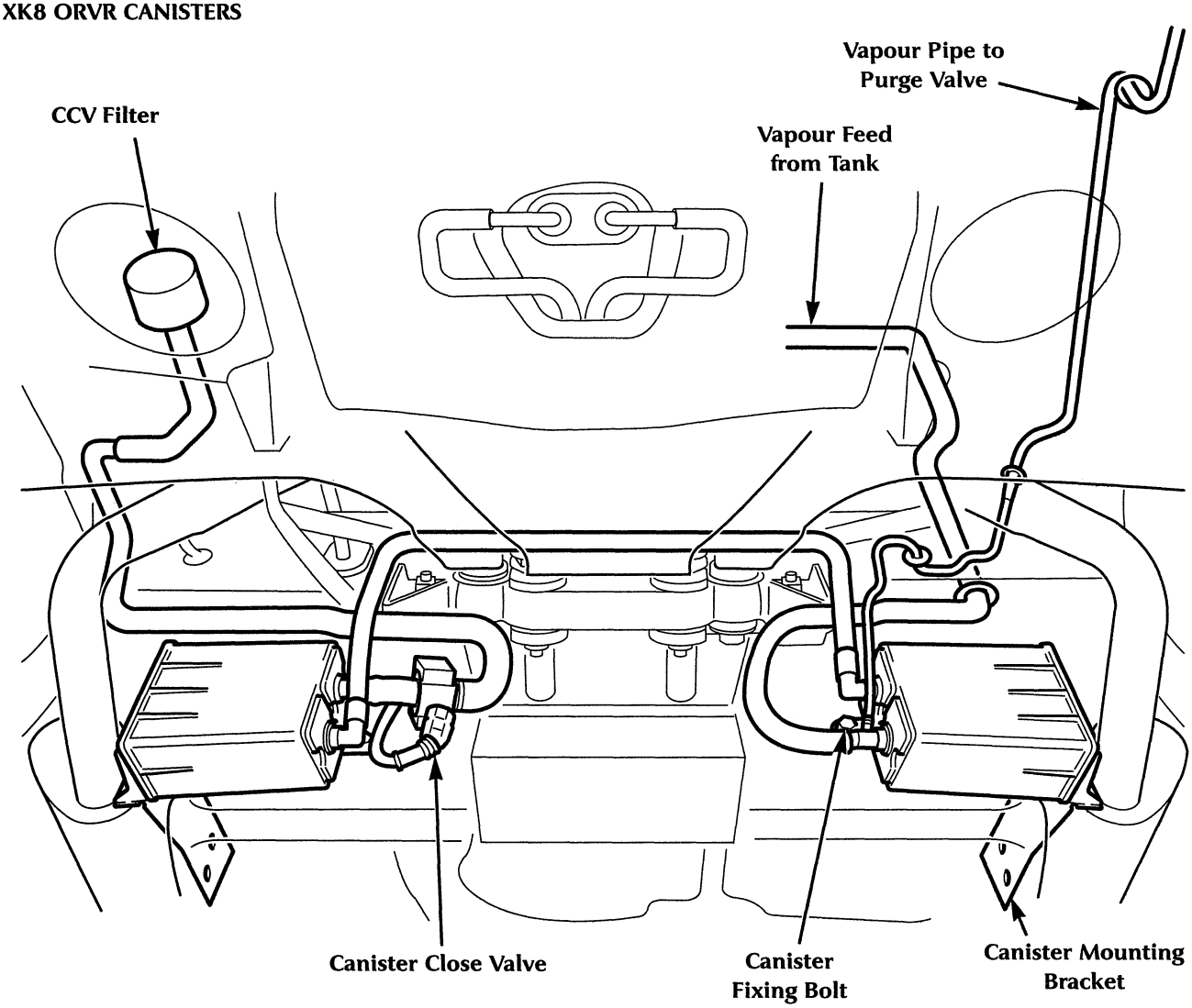

D.310.041

EVAP Purge Valve
The ORVR purge valve is located behind the wheel arch liner to the rear of the left front wheel.

Fuel Tank
The ORVR fuel tank has similar modified features to that of the sedan. Due to the relocation of the canisters, the vapour pipes pass through the floor of the trunk. Note that, on the convertible model, the closing panel behind the tank is modified to accommodate the vapour pipes.

XK8 ORVR PURGE VALVE

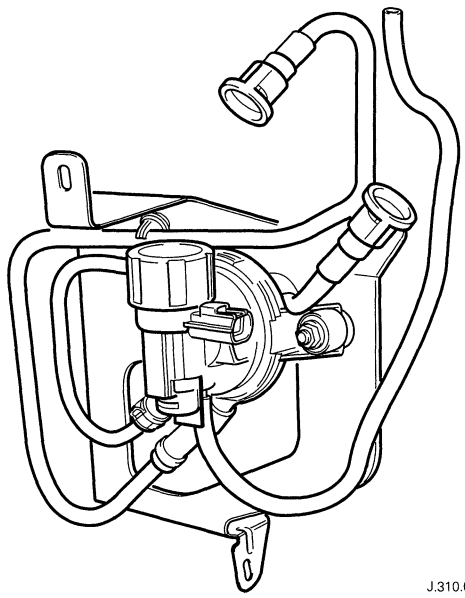

J.310.042

XK8 ORVR FUEL TANK

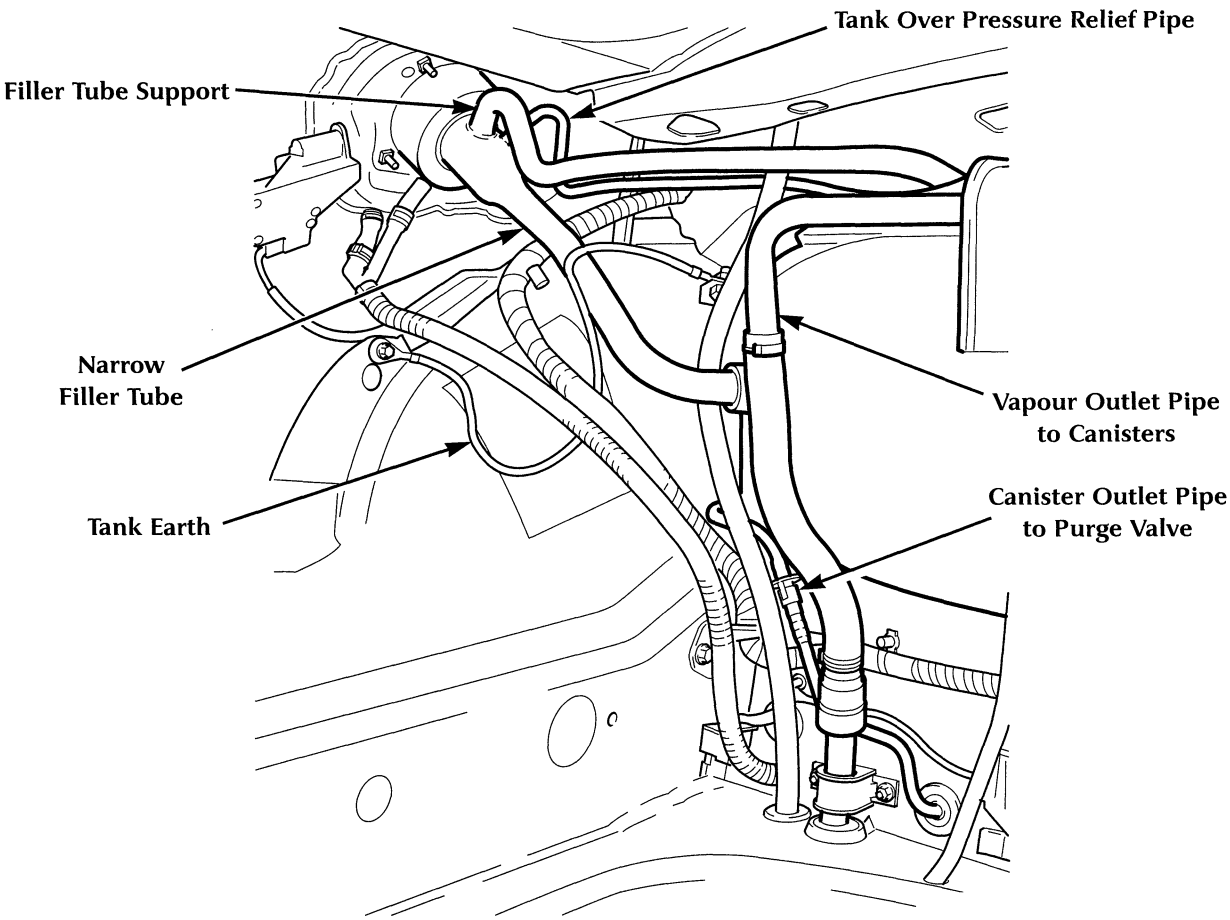

J.310.043

Evaporative Loss Flange
The evaporative loss flange uses the same components as are fitted to the sedan ORVR system but with a modified flange to suit the different tank size and fuel level.

EVAPORATIVE LOSS FLANGE

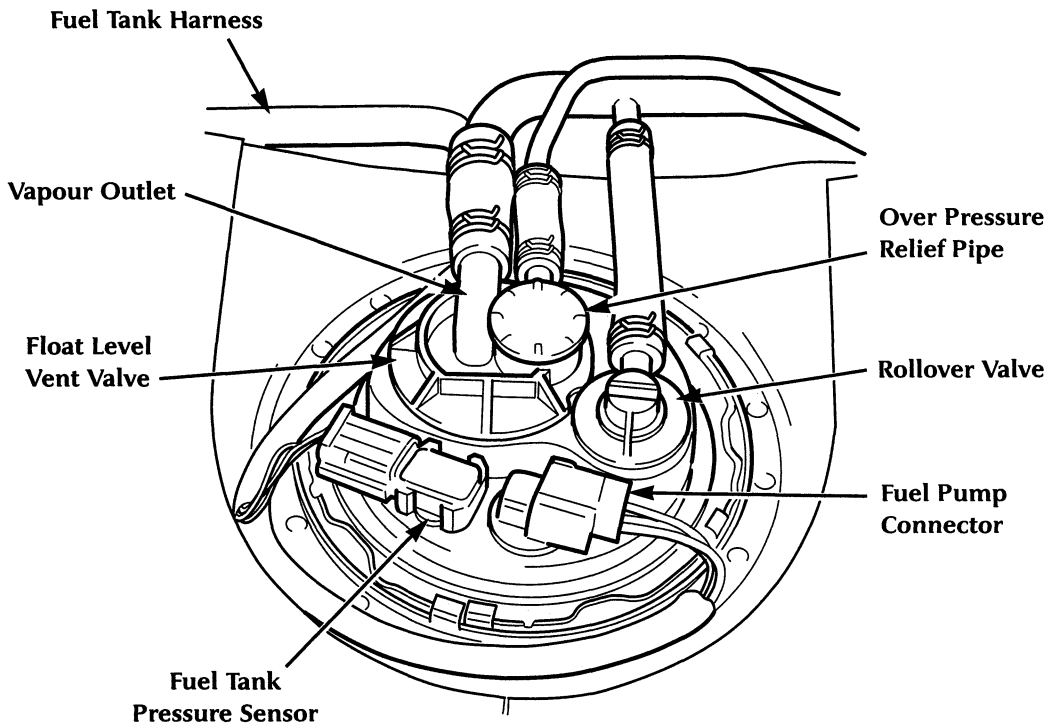

D.310.044

Transmission Control Module

A new TCM is fitted to all N/A sedan and sports models; the SC sedan is unchanged. The module has increased memory capacity and incorporates a number of changes to the transmission management system:

- The addition of an oil temperature sensor to the AJ27 engine allows this data to be passed to the TCM (via CAN). If the oil temperature rises above a certain threshold with 4th gear manually selected on the 'J' gate, the 'hold 4th gear' inhibit is overridden and transmission control selects 5th gear (gear lever still in position '4'). When the temperature drops below a second threshold, the override is removed and selection goes back to 4th.
- If the throttle valve and pedal position sensors fail, the loss of throttle information to the TCM causes the transmission to enter limp home mode (the throttle will be in mechanical limp home operation). A new DTC (P1632) indicating throttle failure is added to the fault code list.
- Barometric pressure is sent to the TCM from the ECM; variations in altitude affect the engine torque and this data allows the TCM to select an appropriate shift pattern.
- Changes are made to the selection of the appropriate control mode to prevent traction control being entered unnecessarily at low levels of wheel spin, such as initial acceleration from rest.

KICKDOWN SWITCH

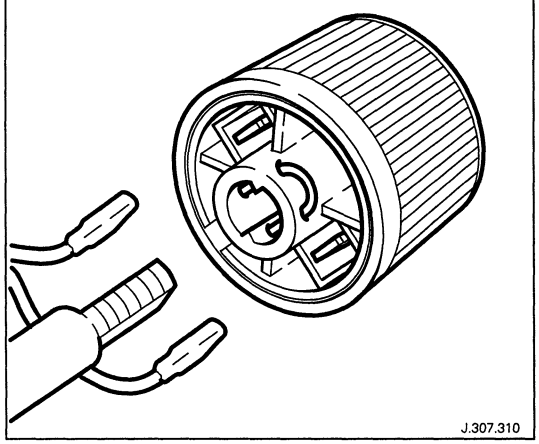

Kickdown Switch and Pedal Stop

New accelerator pedal stops and kickdown switches are fitted to XJR sedan. The mounting stud for both components has flats machined on opposite sides of the pedal stop/switch end. The mounting hole in the pedal stop and kickdown switch has no internal thread but is fitted with a 'U' shaped spring clip across the aperture. Adjustment is by sliding the pedal stop or kickdown switch up and down the stud to the desired position, then rotating the component 90° clockwise so that the spring clip engages with the stud threads, locking the stop/switch into position.

The kickdown switch has a normally open contact and uses two spade type terminals for external connections.

Steering System

PAS Steering

The ZF Servotronic 2 PAS control system is introduced on all XK8 and XJ Series models. There are two variants of the Servotronic 2 hydraulic control unit, each having different diameter torsion bars for positive center feel effect: a 0.212in (5.4mm) bar for the Sports steering rack assembly and a 0.204in (5.2mm) bar for the lighter feel Comfort rack. The solenoid controlled variable orifice valve fitted to the hydraulic control unit is unchanged. The PAS control module (PASCM) comes in three variants, each programmed ('tuned') to suit the characteristics of the particular models.

The variations as applied to the vehicle range are as follows:

- all XJ Series models with both Comfort and Sport rack assemblies use the same PASCM
- XK8 has the Sport rack with a unique PASCM

Steering rack identification is as before, a silver plate for the Sport assembly and green for the Comfort.

Brake System

The XJR sedan is fitted with 12.79in (325mm) diameter front discs in place of the previous 12in (305mm) discs. New calipers and pads are also fitted and the pad material is of a different composition with improved performance. Note that the disc shields and other components of the brake system are unchanged.

LUNAR STYLE WHEEL

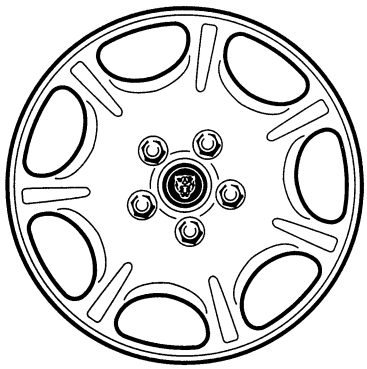

J.501.1555

Road Wheels

A new optional alloy 'Lunar' wheel, size 7x16in, is introduced for the XJ Series.

Rear Speakers

The introduction of the B/C post braces on XK8 convertible vehicles has meant that changes had to be made to the mounting of rear speakers in some variants.

Premium ICE - Coupe
As per 1998 MY XK8.

Premium ICE - Convertible
The upper of the B post fixings on the speaker box has been deleted, leaving the other fixing brackets as on 1998 MY XK8.

Standard ICE - Coupe
As per 1998 MY XK8

Standard ICE - Convertible
On N/A vehicles new fastenings are used.

Published by Service Communications
July 1998

Jaguar Cars Limited
Publication Part No JJM 18 15 18/90